FRI+152/66

15-Inch Two-Way Full-Range Passive or Active Speaker System

Key Features

- **Compact, Easily Arrayable Cabinets**
- **RMD^{tm} –Ring Mode Decoupled**
- **3" Pure Titanium HF Compression Driver**
- **Available in 3 different Horn Patterns**
- **Switchable Passive or Active Operation**
- **Available in Black, White or Unfinished**
- **Manufactured with Pride in the United States**
- **Cloth Coverable Grills**
- **Paintable Enclosure**

General Description

The Fri+ series of Professional Fixed Install Speakers deliver a broad range of performance options including multiple horn patterns, easily switchable passive or bi-amp operation, and EV's World renown transducer technology for response that is smooth and linear. The Fri+ is an economical and flexible solution for the most demanding installations. Offering superior performance, the Fri+152/66 is also equipped with 12-recessed shoulder bolted suspension points for easy flying and each cabinet includes 3, 3/8" forged eye-bolts for convenience. All Fri+ speakers have a vertical box height of 28" allowing neat, concise and visually appealing arrays. The fully rotatable horns allow the installer to construct arrays covering the most demanding acoustical environments while maintaining an aesthetic and uniform installation. The structural integrity of the Fri+ cabinets allow for vertical arrays up 3 boxes in depth. Fri+ speakers are specifically recommended for demanding, cost conscious installations such as Houses of Worship, Nightclubs, Live Music Venues, and mutli-use spaces such as Gymnasiums and Auditoriums. All Fri+ speakers employ EV's exclusive Ring Mode Decoupling (RMD^{tm}) and high performance, World Class EV transducer design and technology to ensure maximum speech intelligibility and musical clarity. Additionally, all Fri+ systems are available in Black or White EVCoat^{TM}, and Unfinished options.

Technical Specifications

Freq. Response[1] (-3 dB):	70Hz-15kHz
Freq. Range[1] (-10 dB):	42Hz-16kHz
Max Calculated SPL:	129 dB
Horizontal Coverage:	60°
Vertical Coverage:	60°
LF Power Handling:	350W Continuous, 1400W Peak
HF Power Handling:	60W Continuous, 240W Peak
Sensitivity:	98 dB (1W/1m)
LF Transducer:	DL15BFH 15" (300mm) Driver
HF Transducer:	DH7 3" (76mm) exit Compression Driver
Connectors:	Two barrier strips
Enclosure Material:	7-ply cross-grain-laminated plywood
Grille:	Powder Coated perforated 16GA steel
Environmental Spec:	IEC 529 IP24 MIL STD 810
Dim (H x W x D):	27.92" x 19.17" x 23.24" (711mm x 487mm x 590mm)
Net Weight (each):	75 lbs (34.0 kg)
Shipping Weight:	87 lbs (39.5 kg)

[1] Full Space measurement. Half Space use will improve LF response.

FRi+152/66 Full Range Loudspeaker

Frequency Response (Full Space):

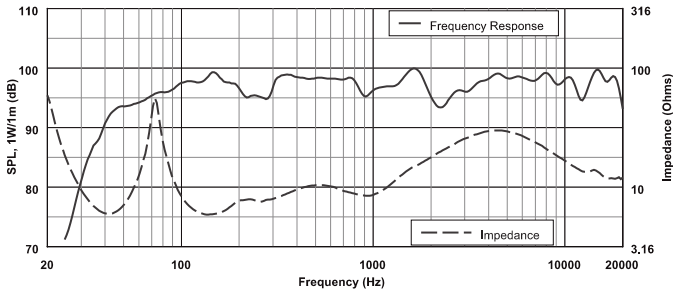

Horizontal Off Axis Frequency Response:

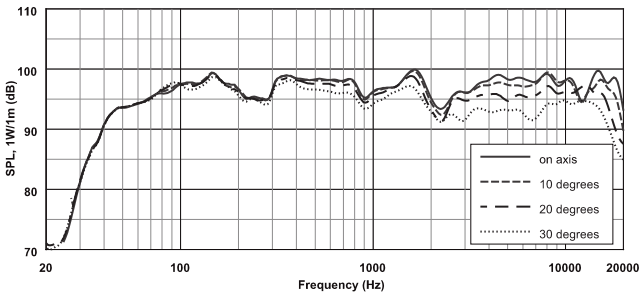

Beamwidth:

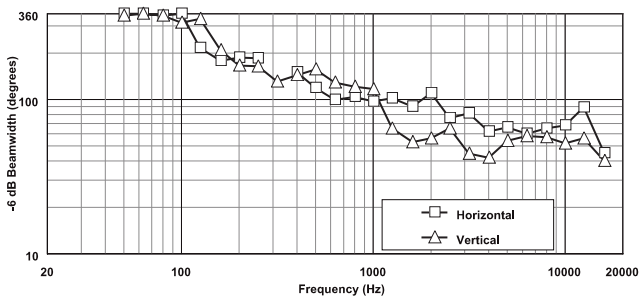

Vertical Off Axis Frequency Response (up):

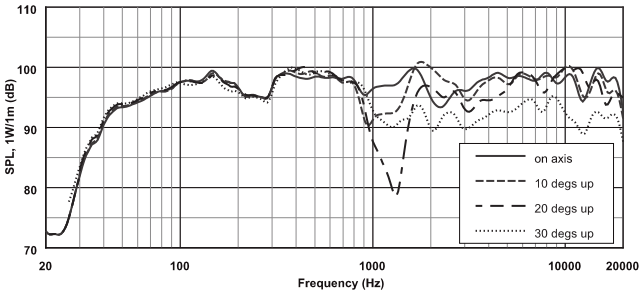

Directivity:

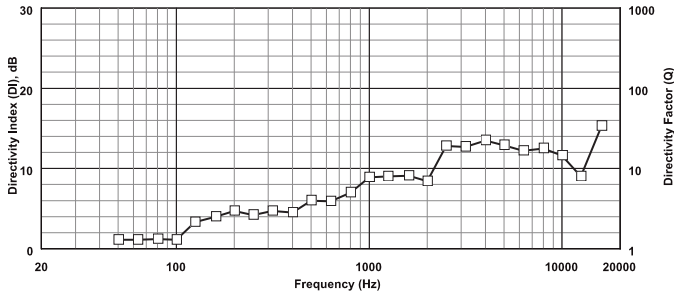

Vertical Off Axis Frequency Response (down):

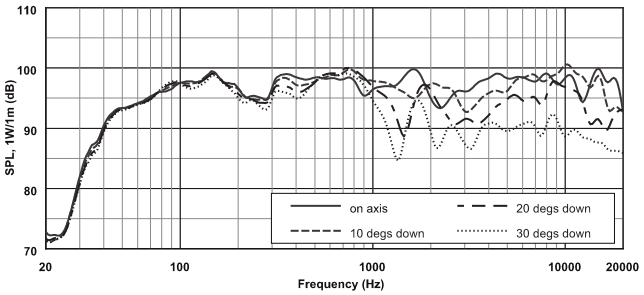

Block Diagram:

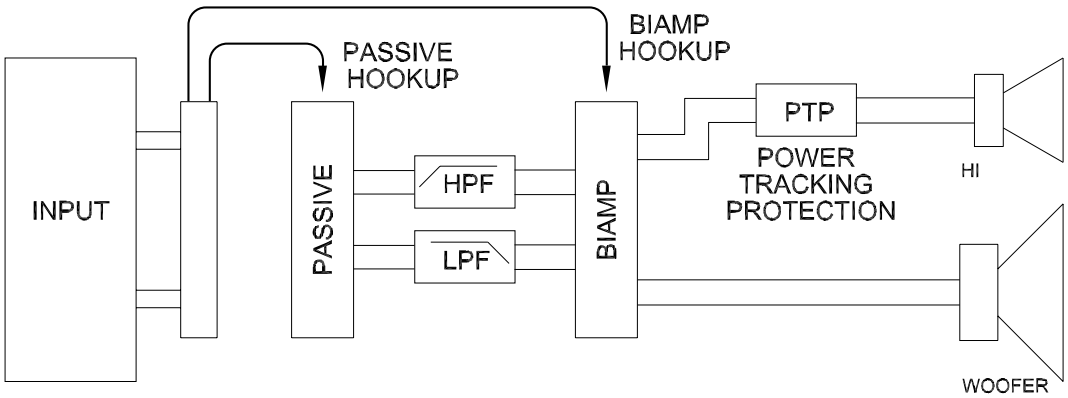

Horizontal 1/3 Octave Polars:

Vertical 1/3 Octave Polars:

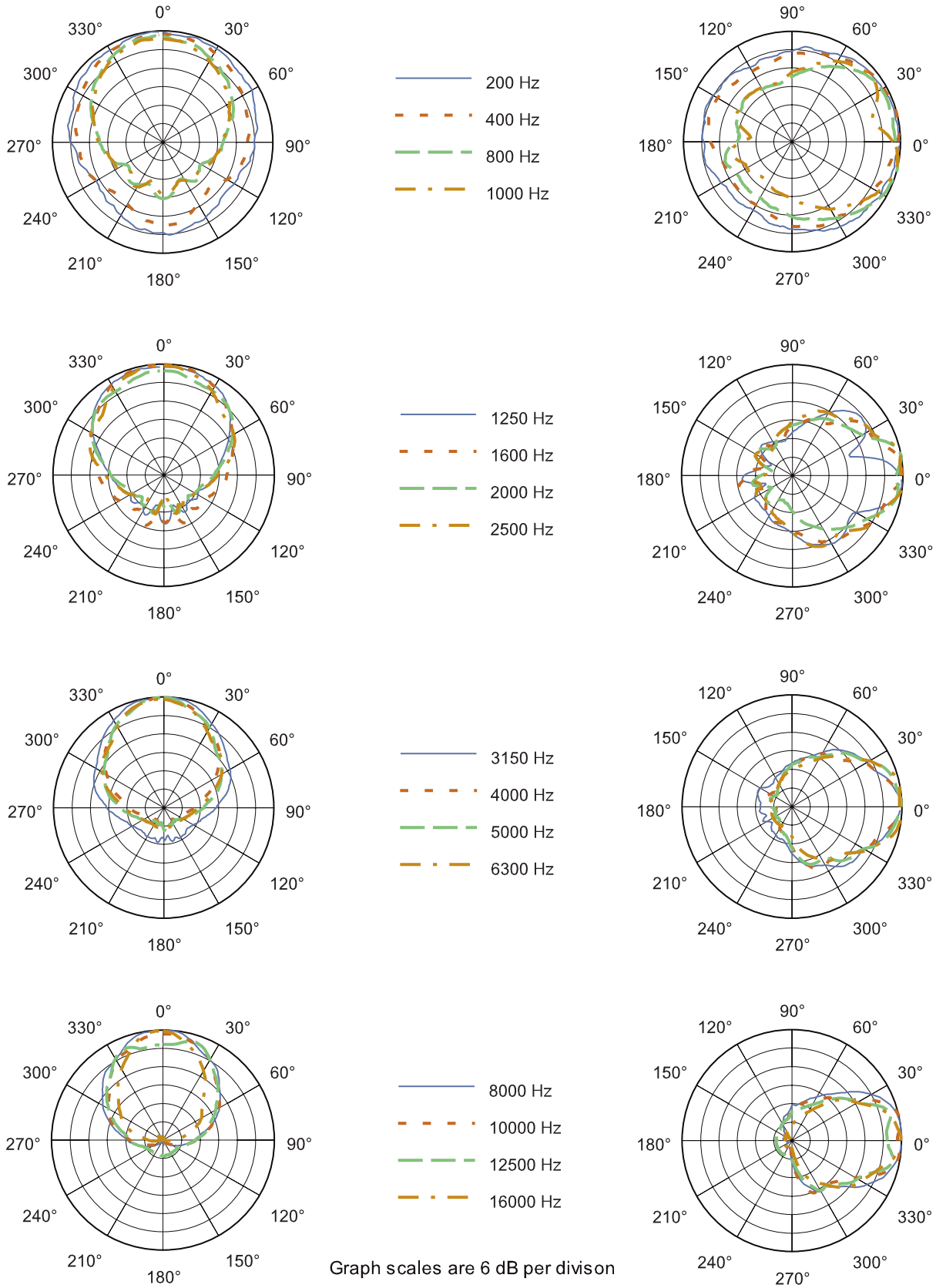

Graph scales are 6 dB per divison

Dimension Drawings:

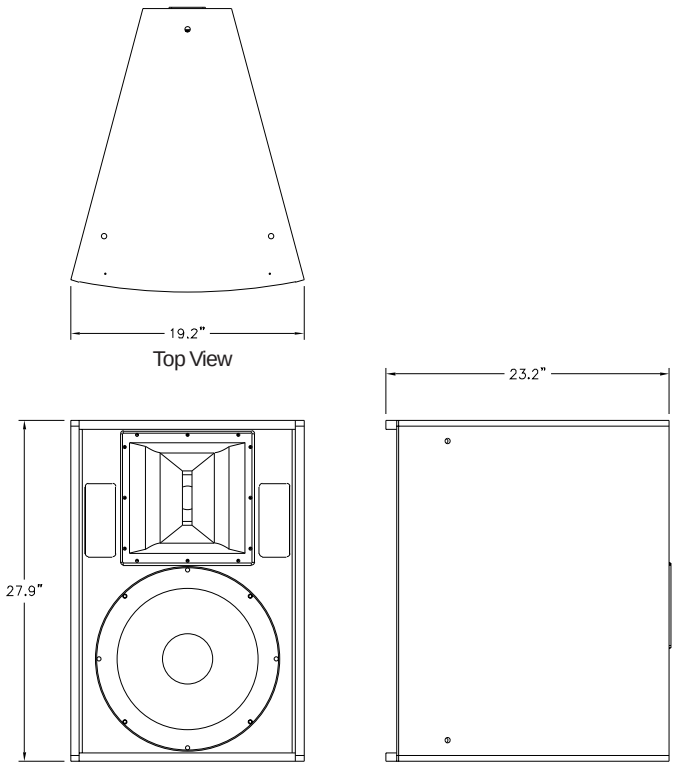

Top View

Front View

Side View

Architectural & Engineering Specs:

The two-way full range loudspeaker system shall incorporate a 15" LF transducer and a 3" (76mm) voice coil HF compression driver. The LF driver shall be mounted in a vented enclosure tuned for optimum low-frequency response. The HF driver shall be loaded on a constant-directivity horn with a nominal coverage pattern of 60° (h) x 60° (v). An internal passive filter network shall provide acoustical crossover and system equalization. Input panel shall easily change from passive to biamp operation via internal connector. System frequency response shall vary no more than +/-3 dB from 70 Hz to 15 kHz measured on axis. The loudspeaker shall produce a sound pressure level (SPL) of 98 dB on axis at 1 meter. It shall handle 350 watts of amplifier power long term (EIA Standard), and shall have a nominal impedance of 8 ohms. The loudspeaker enclosure shall be trapezoidal in shape. It shall be constructed of 7-ply cross-grain-laminated plywood and shall employ extensive internal bracing. It shall be finished in aliphatic polyurethane. Input connectors shall be two at 2 terminal barrier strips. A total of twelve 3/8-16 threaded mounting/suspension points shall be provided, (three each on top and bottom, two per side, two on rear). The front of the loudspeaker shall be cloth coverable with a powder-coated perforated 16 GA steel grille.

The two-way loudspeaker shall be the Electro-Voice model FRi+152/66.

FRi+152/66 Part Numbers: 301212-000, 301212-001, 301212-002

Electro-Voice®

12000 Portland Avenue South, Burnsville, MN 55337
Phone: 952/884-4051, Fax: 952/884-0043

www.electrovoice.com

© Telex Communications, Inc. 5/2005

Part Number 38110-118 Rev. B

U.S.A. and Canada only. For customer orders, contact Customer Service at:
800/392-3497 Fax: 800/955-6831
Europe, Africa, and Middle East only. For customer orders, contact Customer Service at:
+ 49 9421-706 0 Fax: + 49 9421-706 265
Other International locations. For customer orders, contact Customer Service at:
+ 1 952 884-4051 Fax: + 1 952 887-9212
For warranty repair or service information, contact the Service Repair department at:
800/685-2606
For technical assistance, contact Technical Support at: **866/78AUDIO**

Specifications subject to change without notice.